CARGO PLANE

STEP BY STEP

You can also find all our manuals on www.twickto.com/manuals

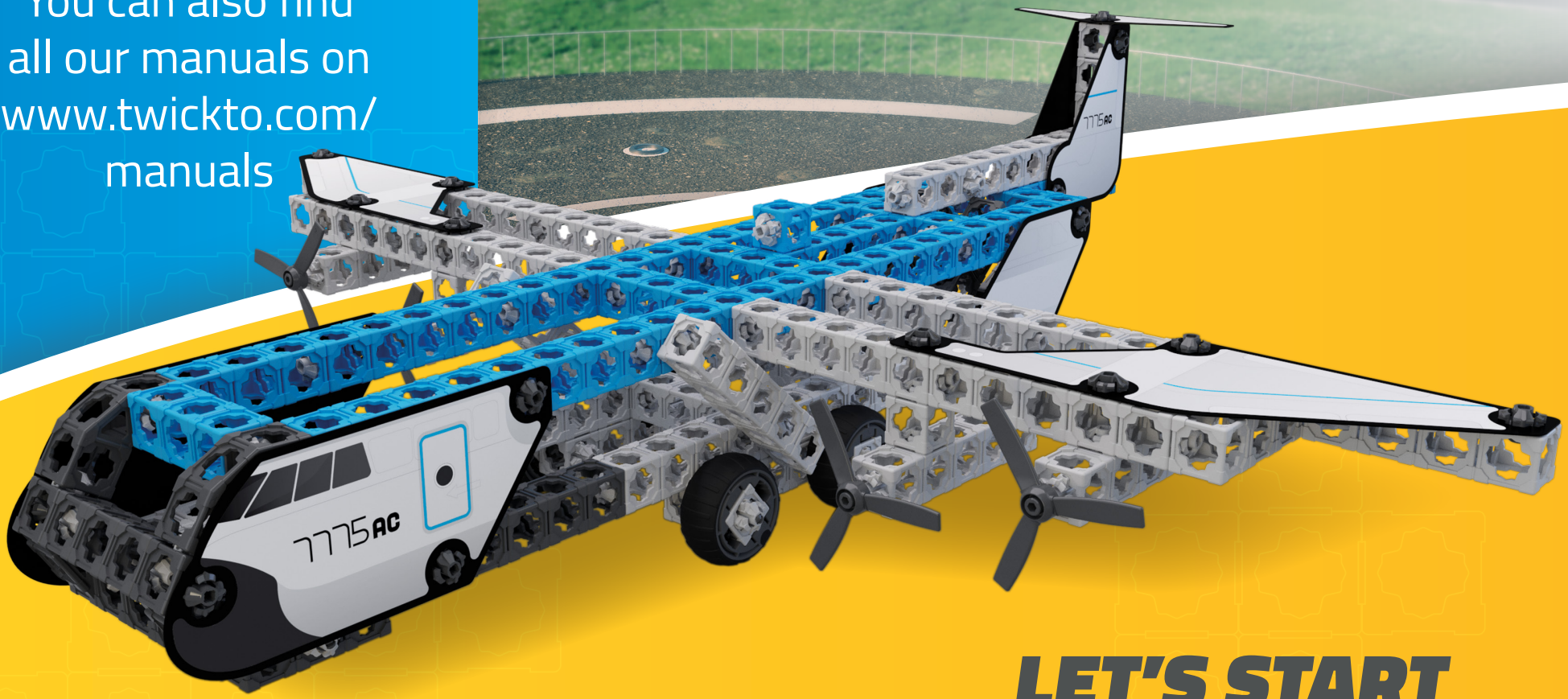

LET'S START BUILDING!

1

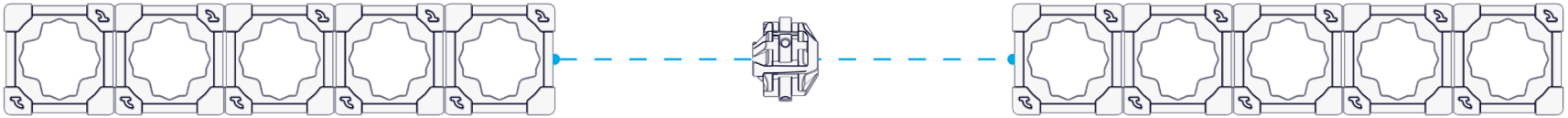

2x

2

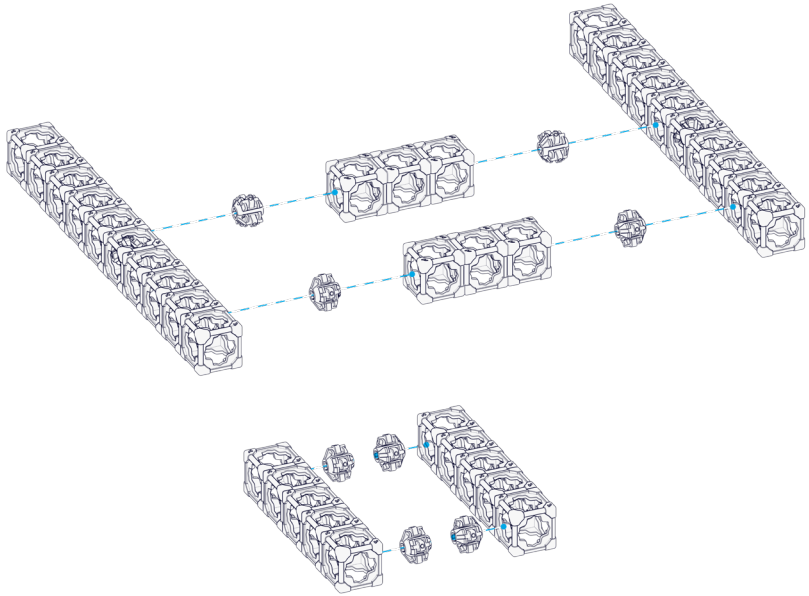

3

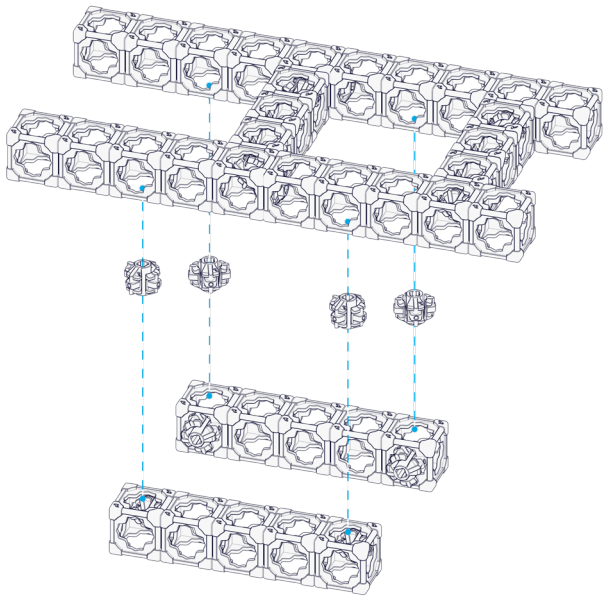

4

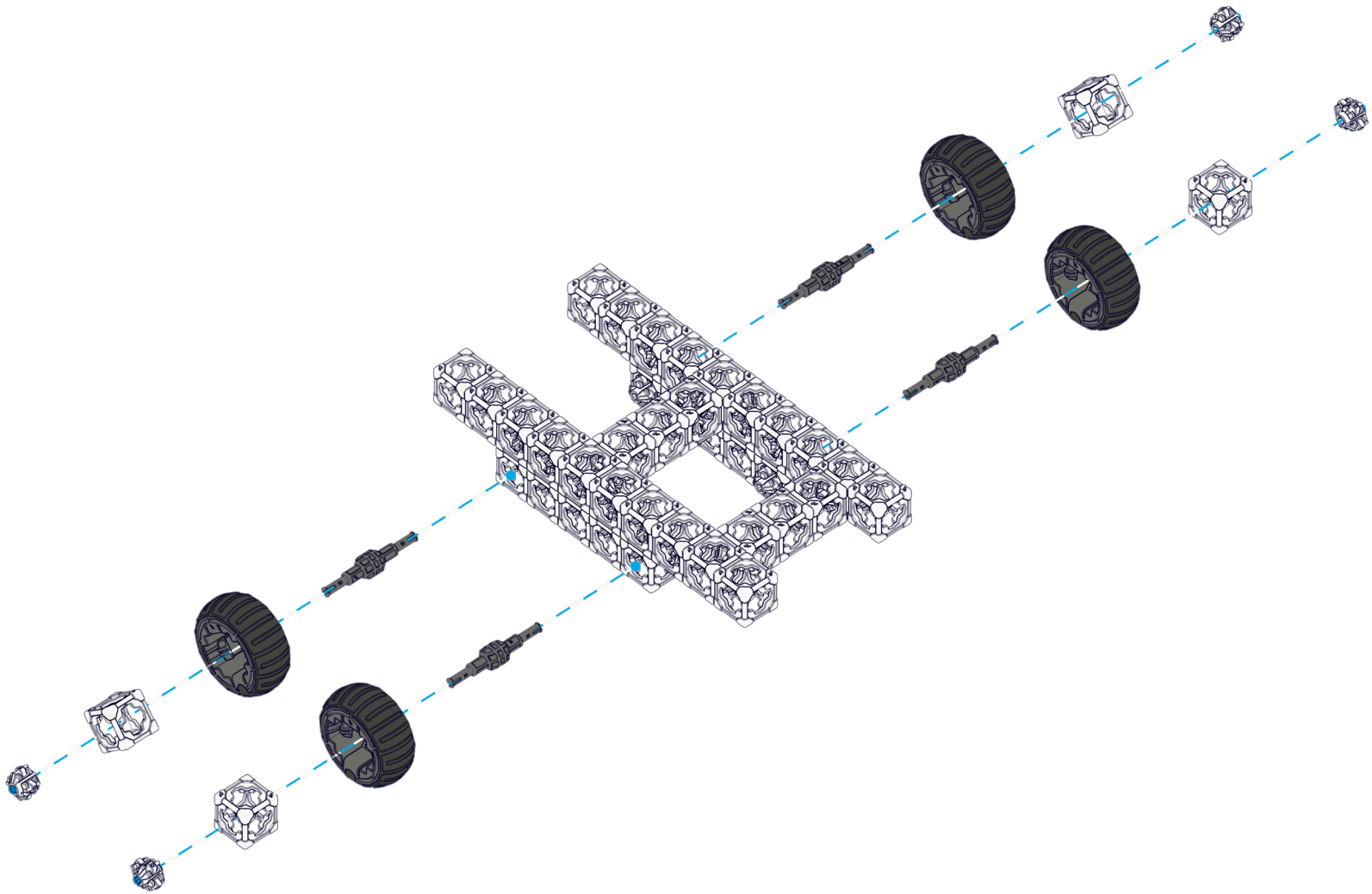

5

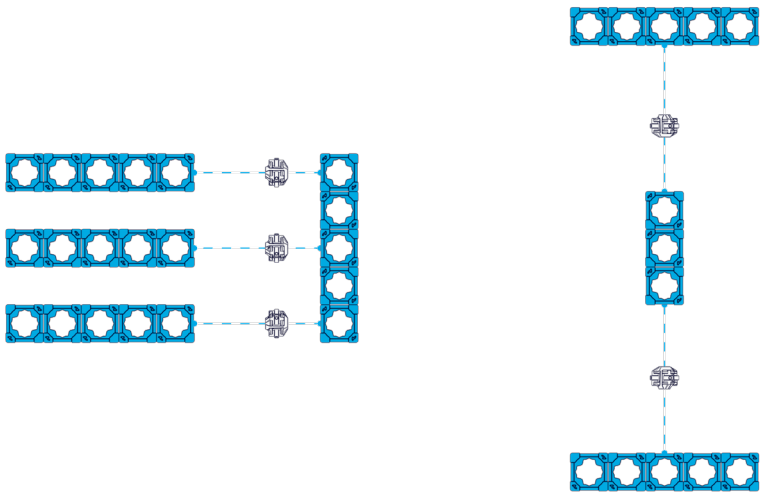

6

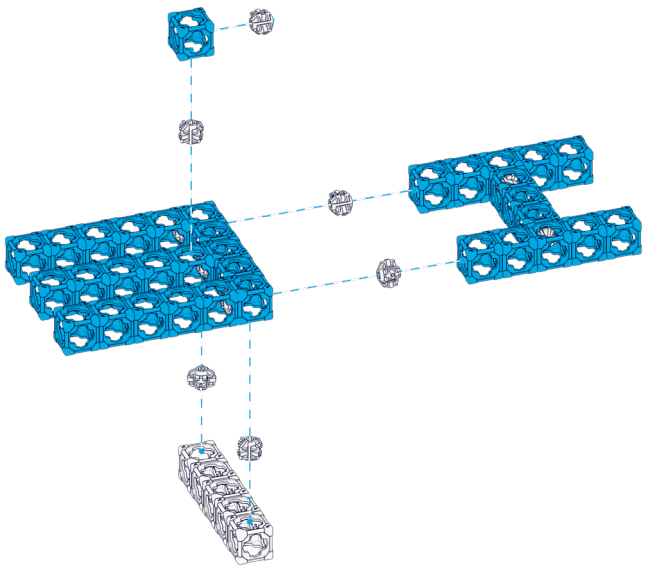

7

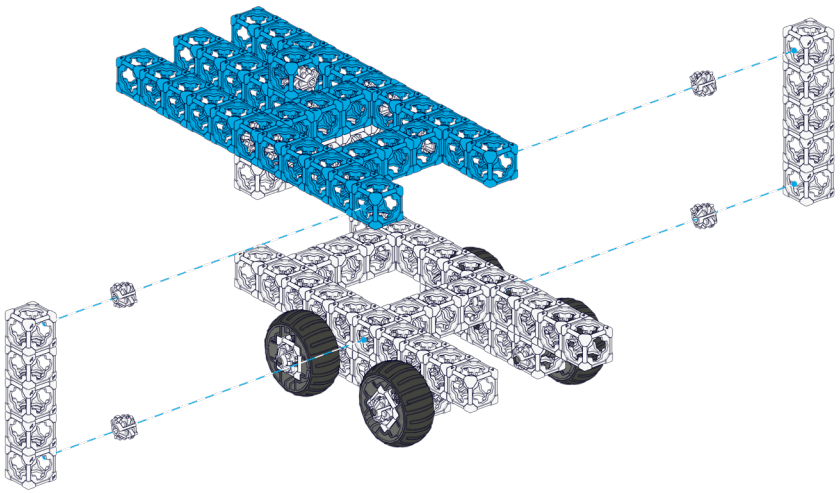

8

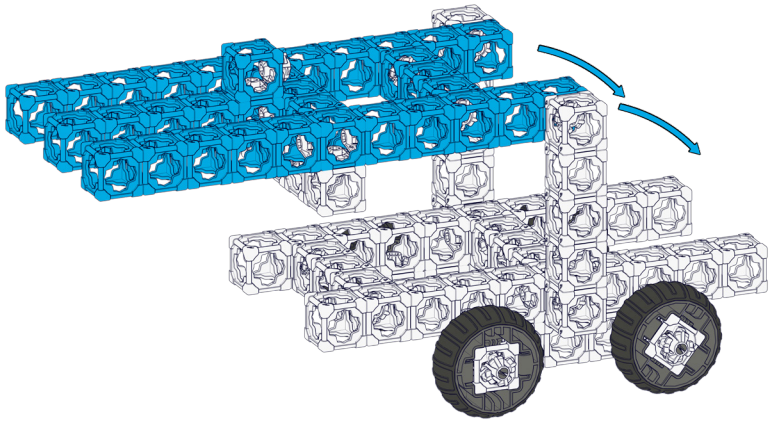

9

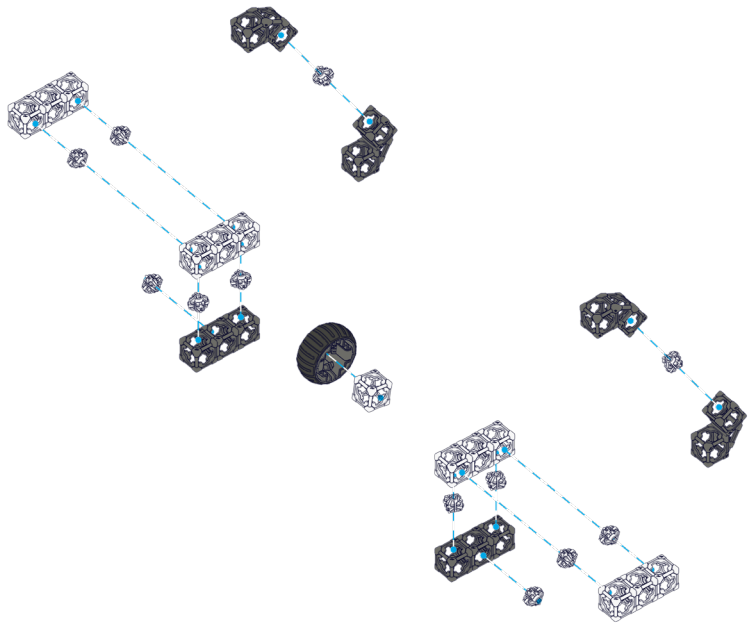

10

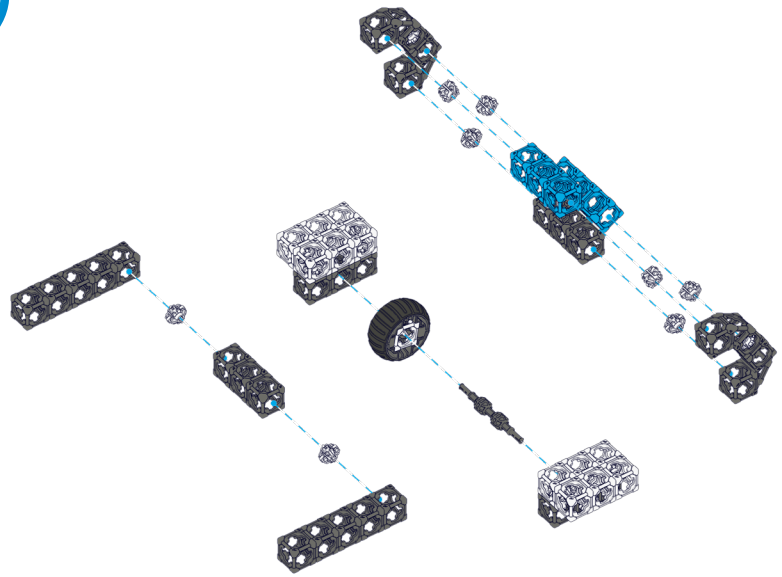

11

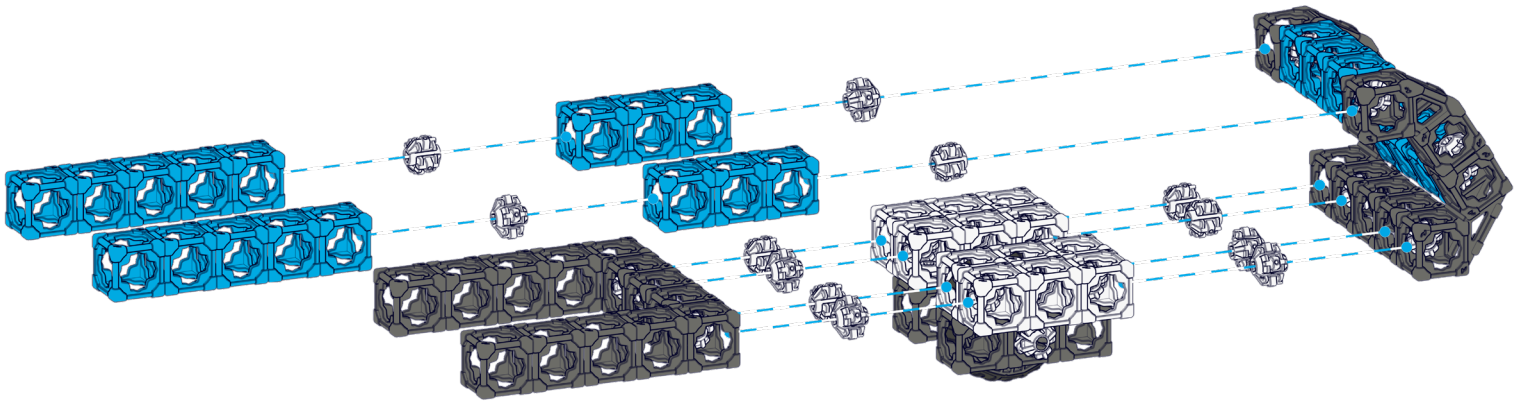

12

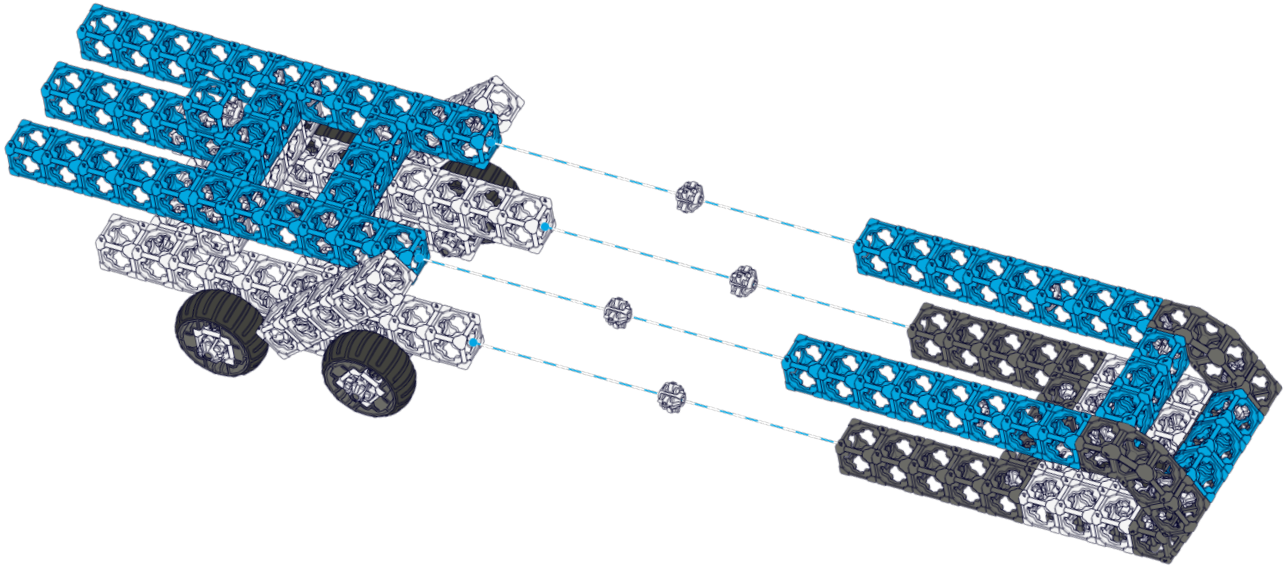

13

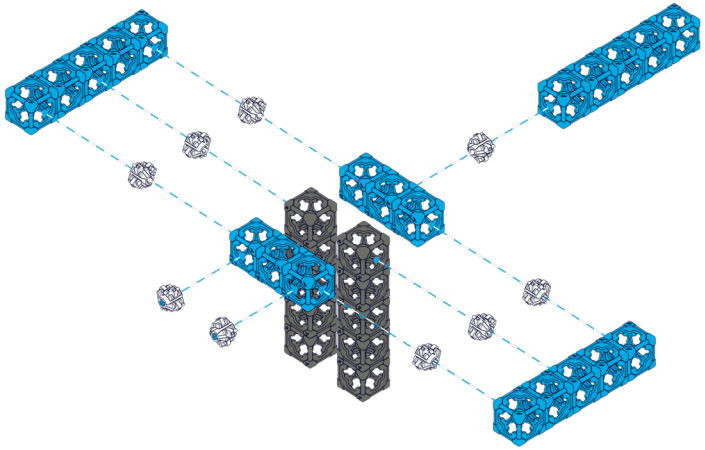

14

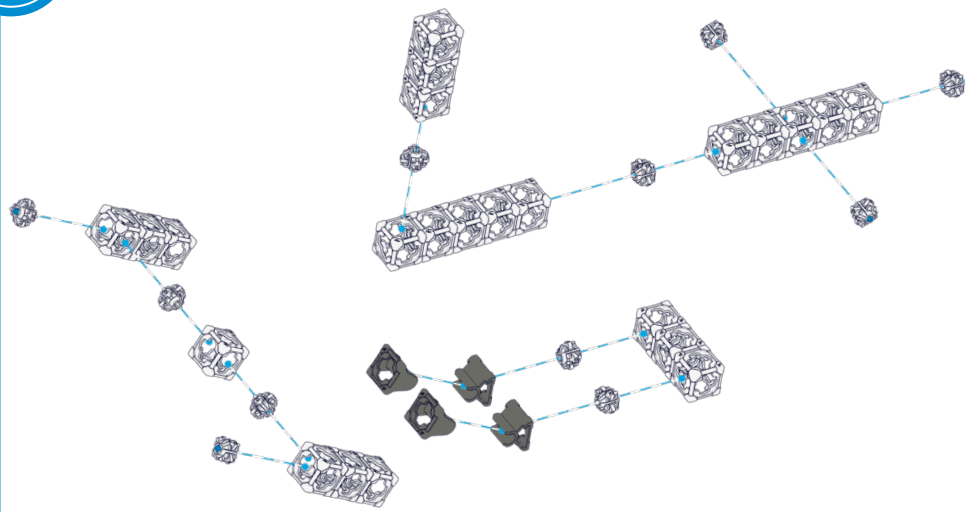

15

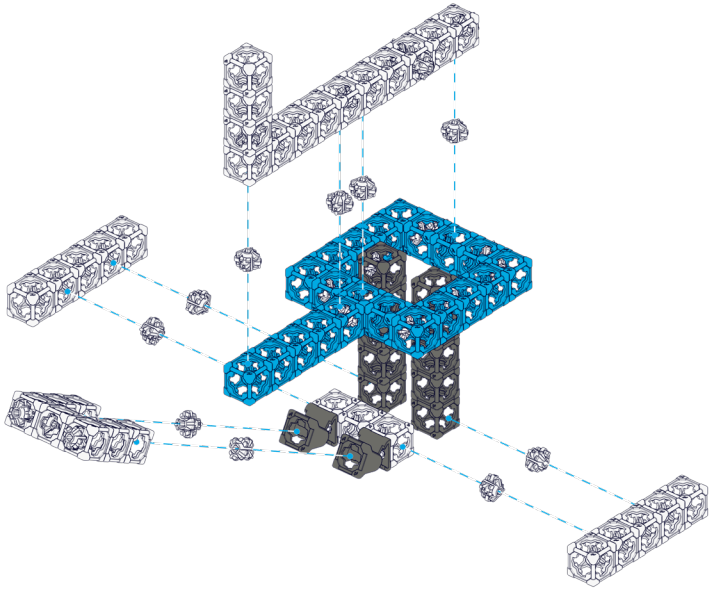

16

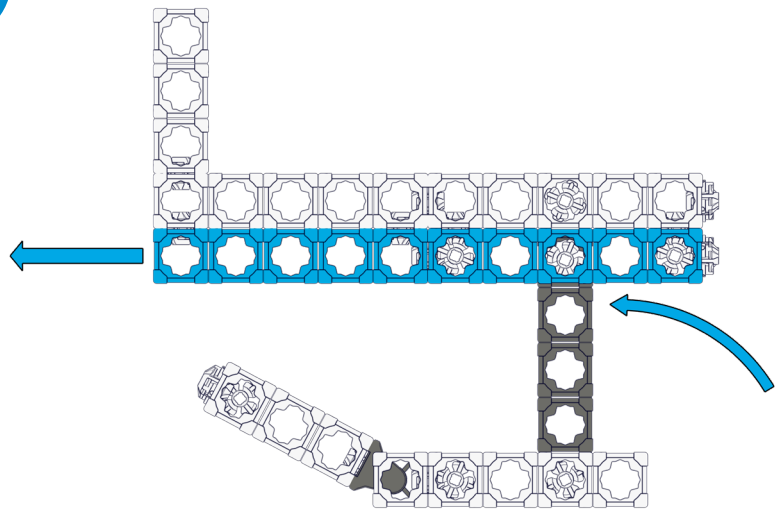

17

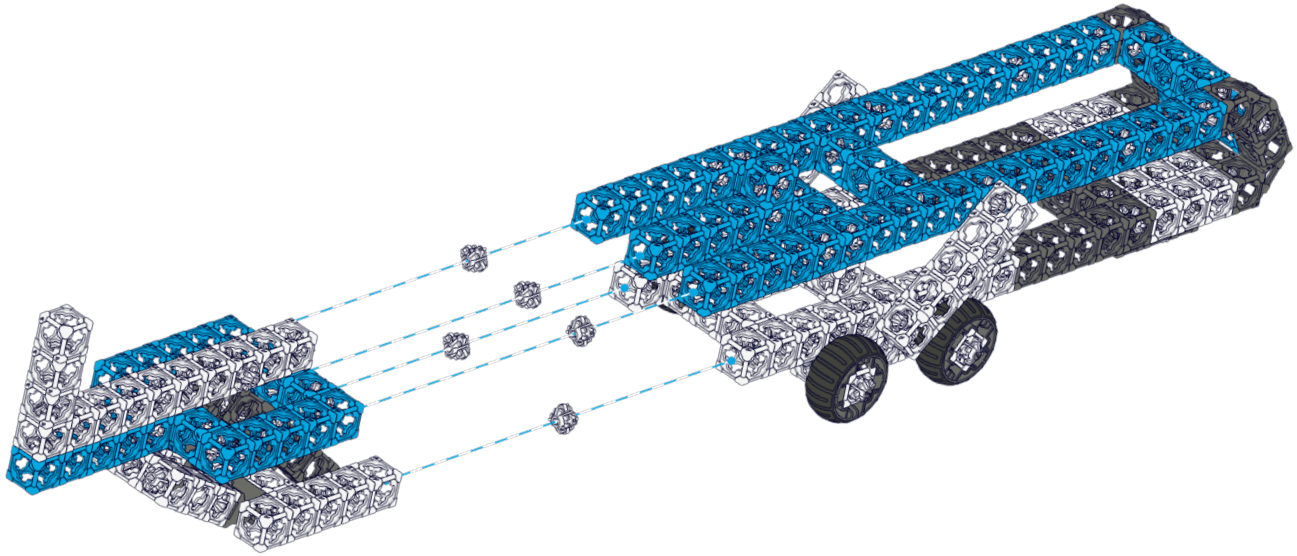

18

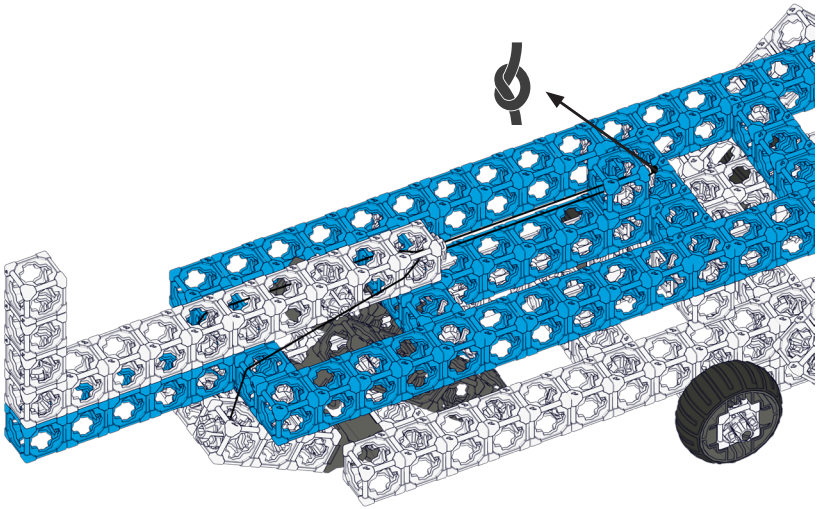

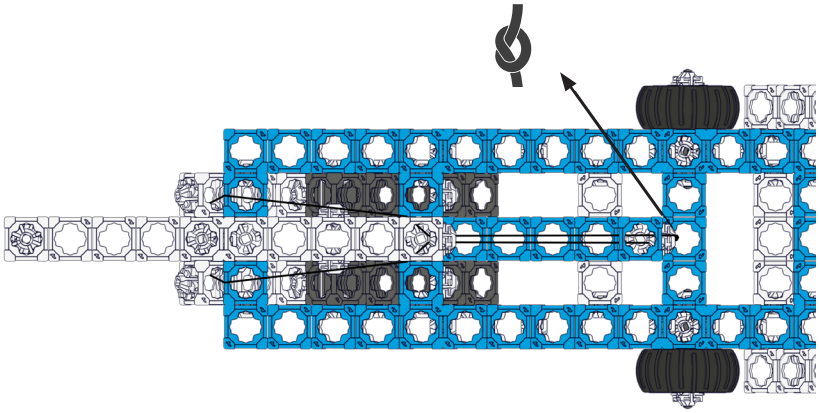

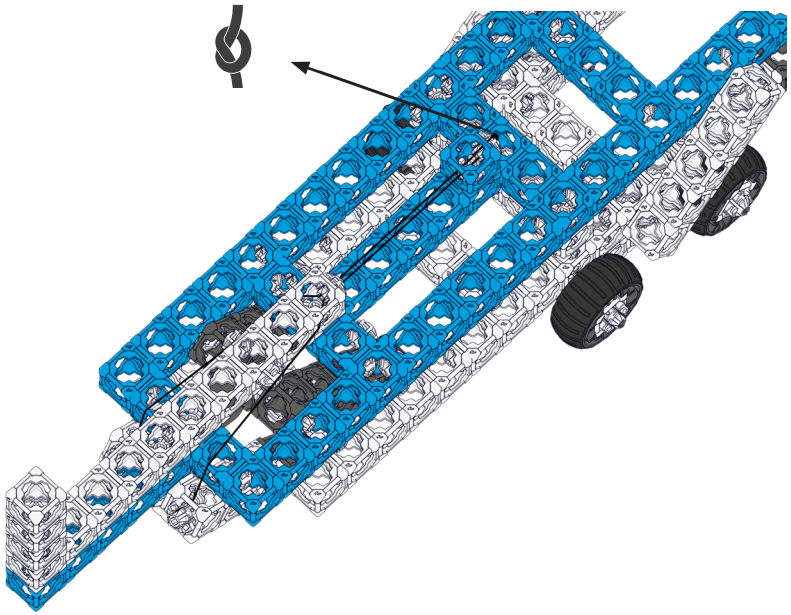

19

2x

20

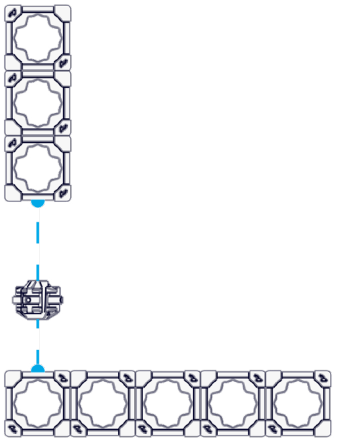

21

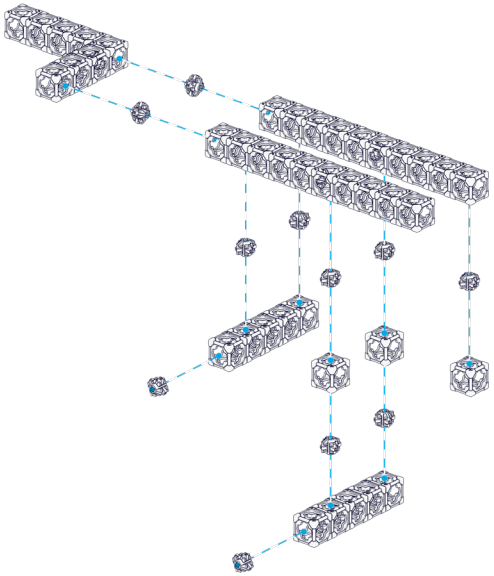

22

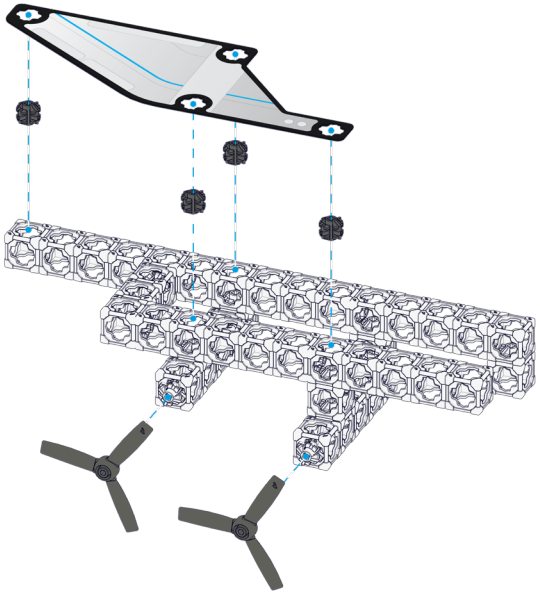

23

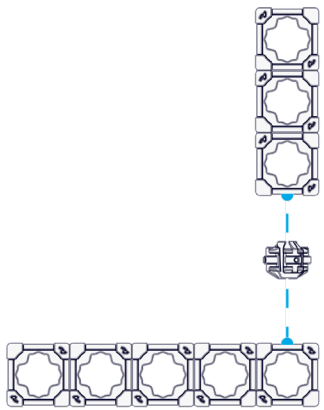

24

2x

25

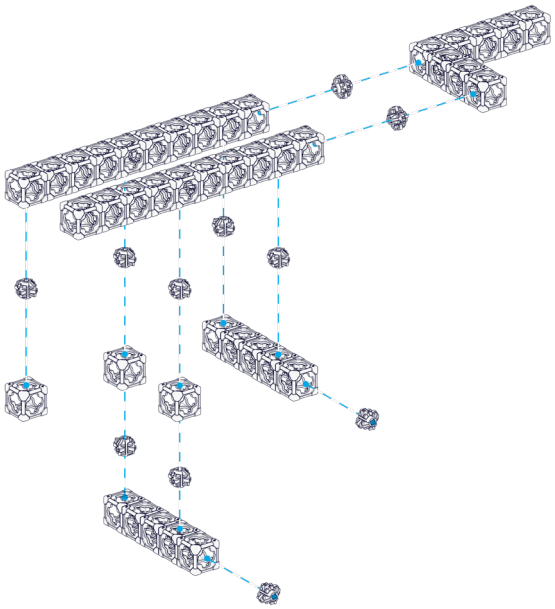

26

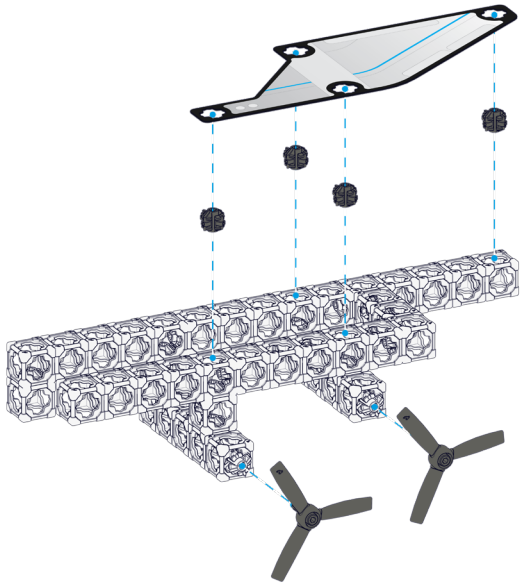

27

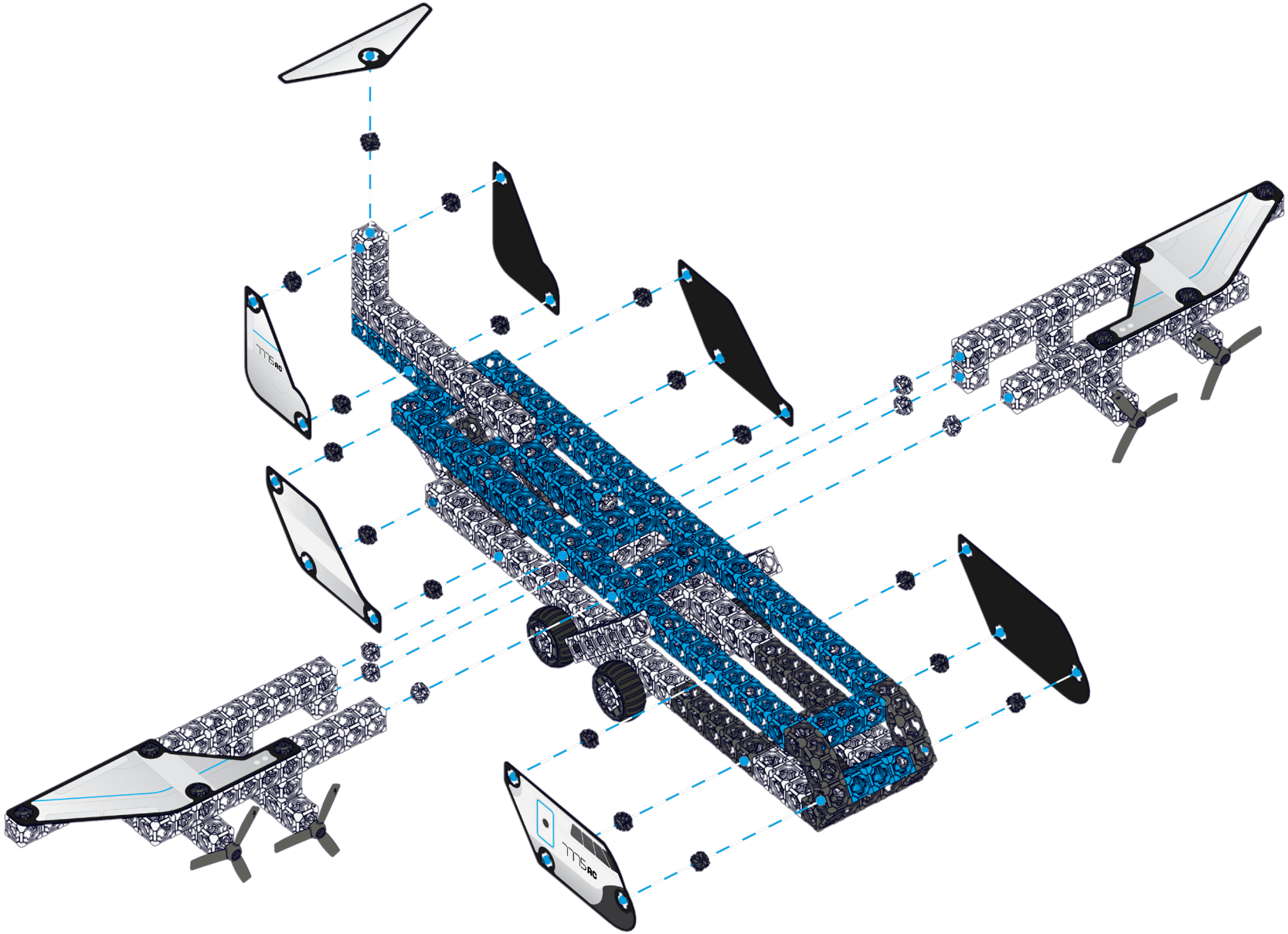

28

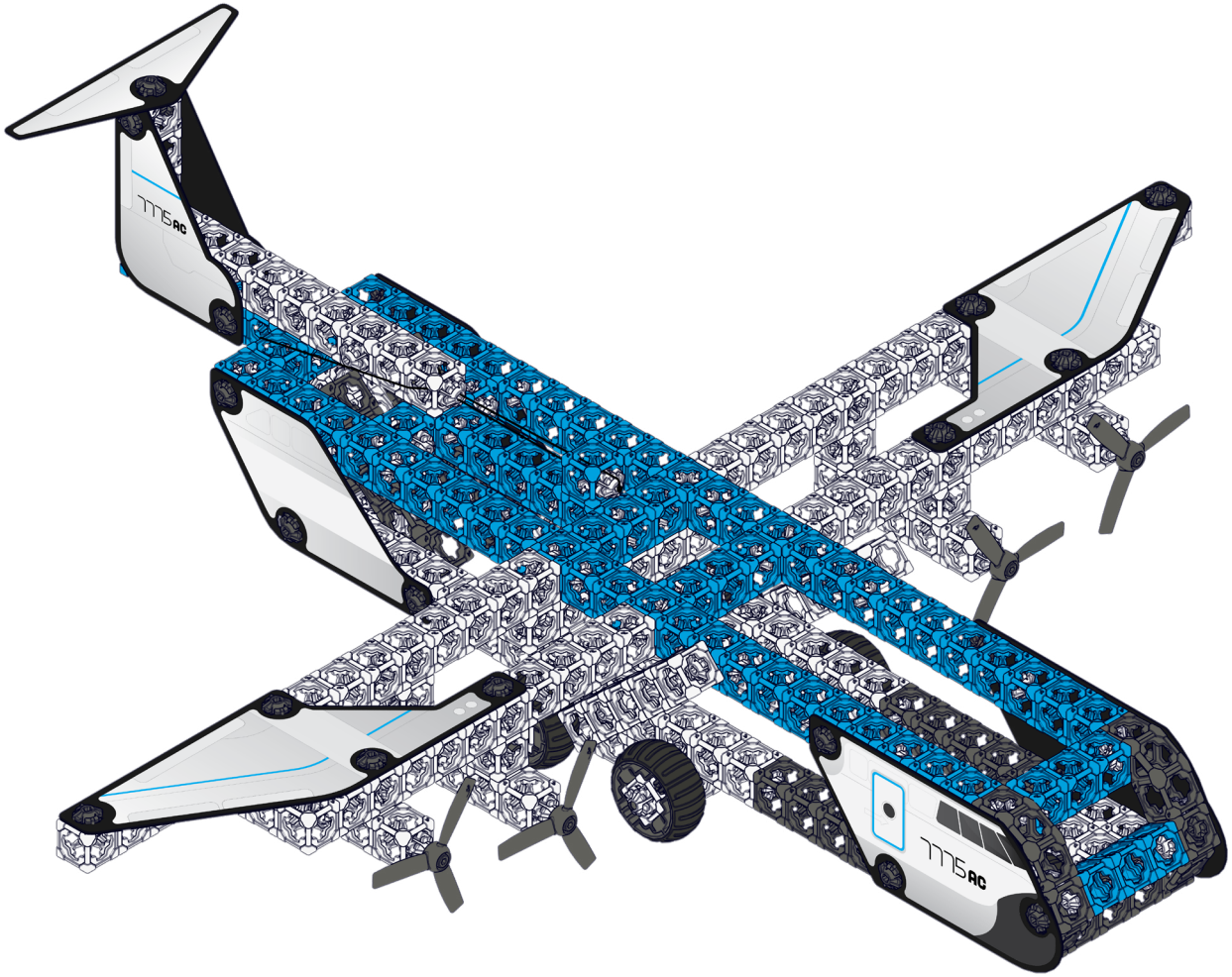

DONE, LET'S PLAY!